CS47L35 DUT

CS47L35_PWR

SHEET-2

CS47L35_ANA_I/O

SHEET-3

CS47L35_DIG_I/O

SHEET-4

SPEAKER_IO

SHEET-5

HEADSET_IO

SHEET-6

EP_IO

SHEET-7

SENSOR_CON

SHEET-8

APPSMINI_CONN_1

SHEET-9

TEST_POINTS

SHEET-10

CIRRUS LOGIC®

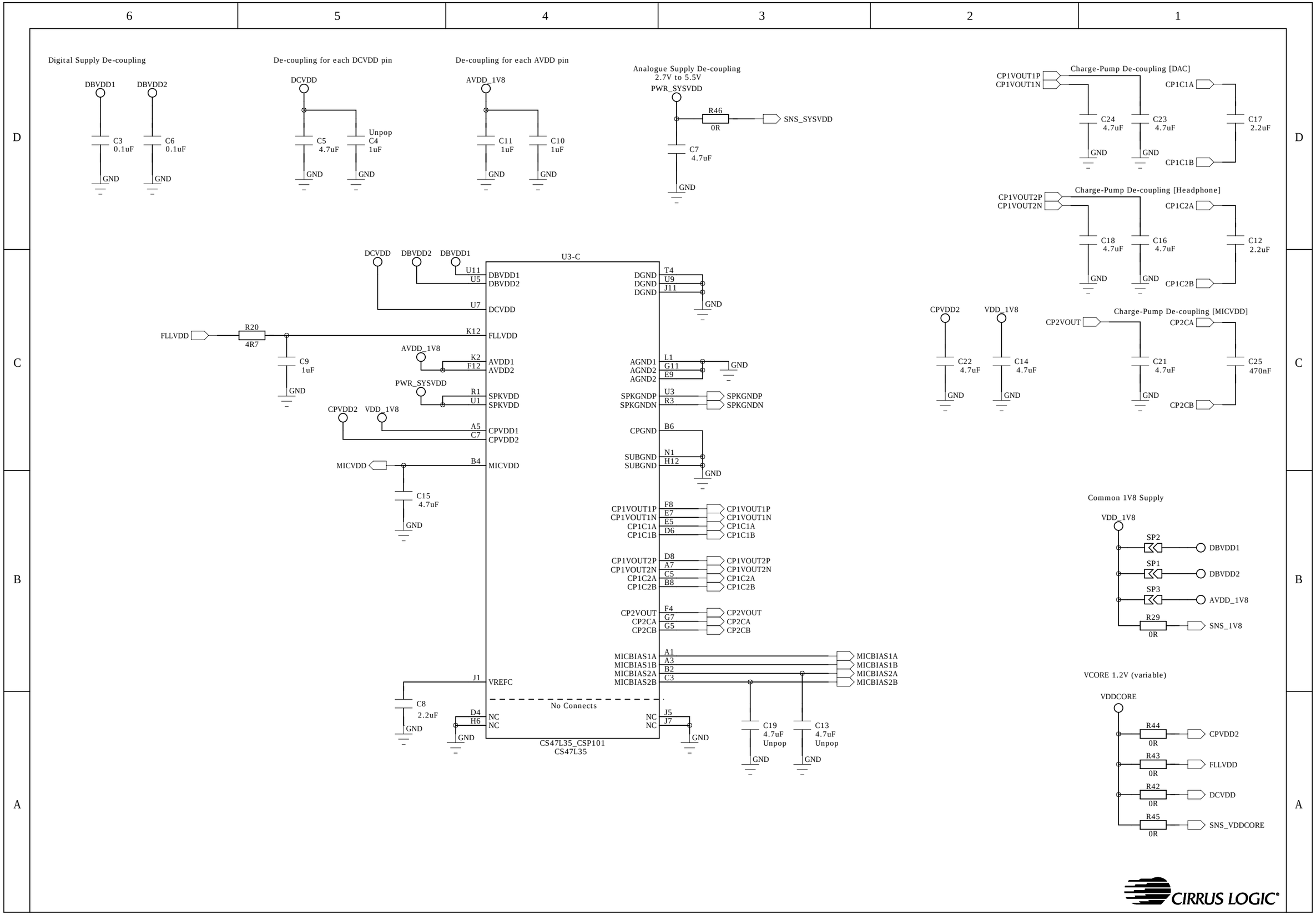
Digital Supply De-coupling
DBVDD1
DBVDD2
C3 0.1uF
C6 0.1uF
GND
De-coupling for each DCVDD pin
DCVDD
C5 4.7uF
Unpop C4 1uF
De-coupling for each AVDD pin
AVDD_1V8
C11 1uF
C10 1uF
Analogue Supply De-coupling
2.7V to 5.5V
PWR_SYSVDD
R46 0R
SNS_SYSVDD
C7 4.7uF
Charge-Pump De-coupling [DAC]
CP1VOUT1P
CP1VOUT1N
CP1C1A
CP1C1B
C24 4.7uF
C23 4.7uF
C17 2.2uF
Charge-Pump De-coupling [Headphone]
CP1VOUT2P
CP1VOUT2N
CP1C2A
CP1C2B
C18 4.7uF
C16 4.7uF
C12 2.2uF
CPVDD2
VDD_1V8
C22 4.7uF
C14 4.7uF
Charge-Pump De-coupling [MICVDD]
CP2VOUT
CP2CA
CP2CB
C21 4.7uF
C25 470nF
U3-C
DCVDD
DBVDD2
DBVDD1
U11 DBVDD1
U5 DBVDD2
U7 DCVDD
FLLVDD
R20 4R7
K12 FLLVDD
C9 1uF
AVDD_1V8
K2 AVDD1
F12 AVDD2
PWR_SYSVDD
R1 SPKVDD
U1 SPKVDD
CPVDD2
VDD_1V8
A5 CPVDD1
C7 CPVDD2
MICVDD
B4 MICVDD
C15 4.7uF
J1 VREFC
C8 2.2uF
D4 NC
H6 NC
No Connects
NC J5
NC J7
CS47L35_CSP101
CS47L35
DGND T4
DGND U9
DGND J11
AGND1 L1
AGND2 G11
AGND2 E9
SPKGNDP U3
SPKGNDN R3
CPGND B6
SUBGND N1
SUBGND H12
CP1VOUT1P F8
CP1VOUT1N E7
CP1C1A E5
CP1C1B D6
CP1VOUT2P D8
CP1VOUT2N A7
CP1C2A C5
CP1C2B B8
CP2VOUT F4
CP2CA G7
CP2CB G5
MICBIAS1A A1
MICBIAS1B A3
MICBIAS2A B2
MICBIAS2B C3
C19 4.7uF Unpop
C13 4.7uF Unpop
Common 1V8 Supply
VDD_1V8
SP2 DBVDD1
SP1 DBVDD2
SP3 AVDD_1V8
R29 0R SNS_1V8
VCORE 1.2V (variable)
VDDCORE
R44 0R CPVDD2
R43 0R FLLVDD
R42 0R DCVDD
R45 0R SNS_VDDCORE
CIRRUS LOGIC

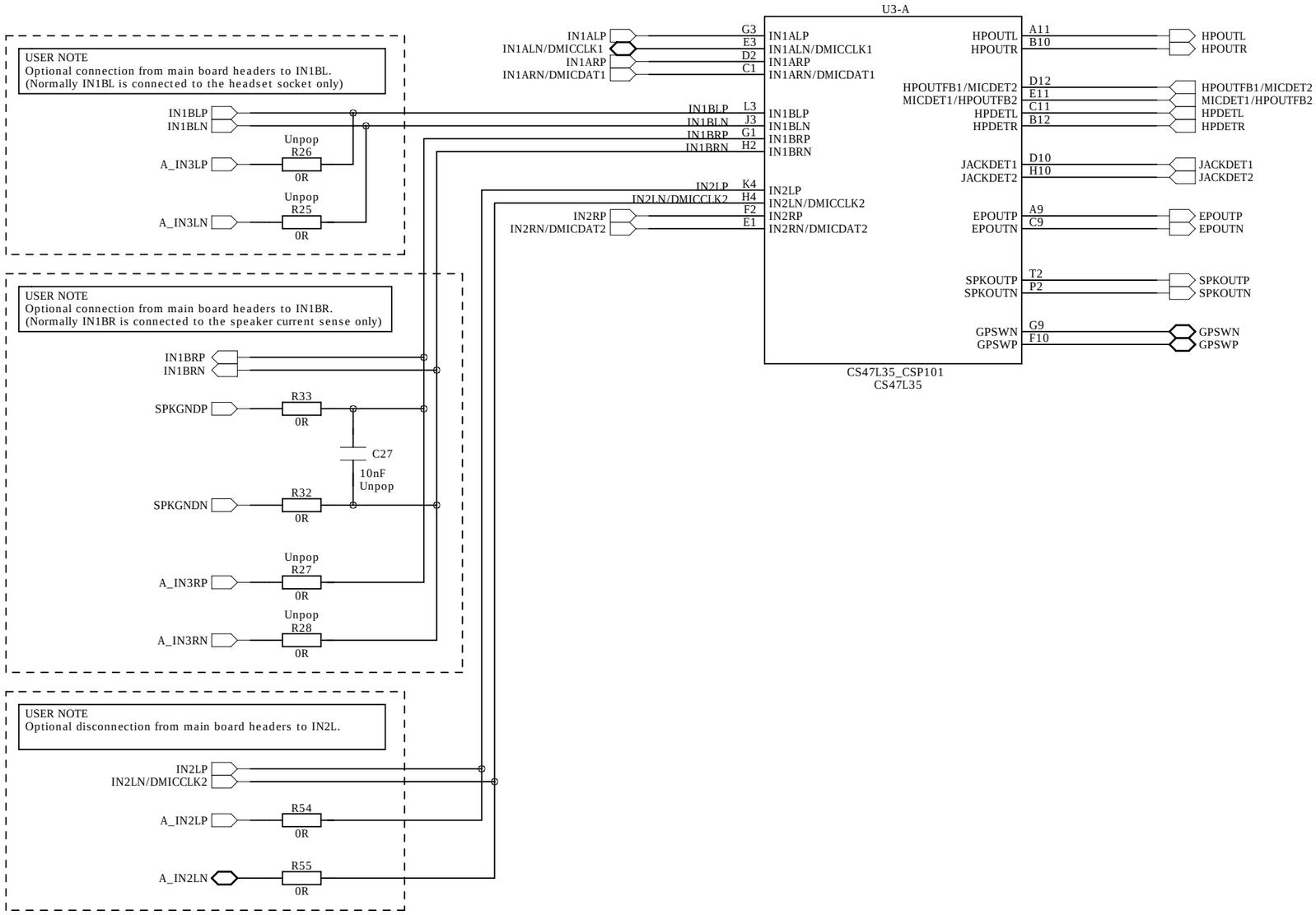

CIRRUS LOGIC®

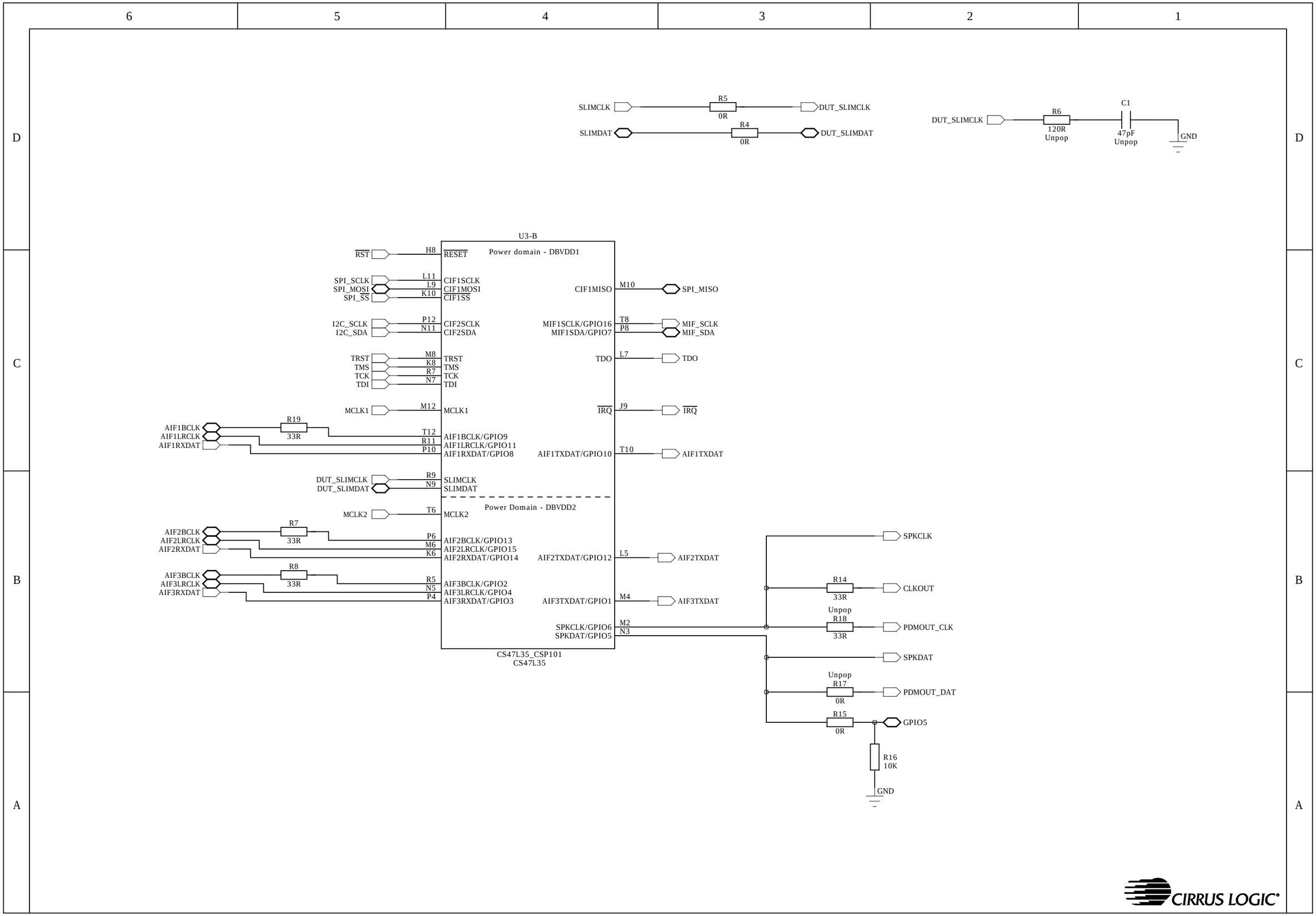
SLIMCLK
R5
0R
DUT_SLIMCLK
SLIMDAT
R4
0R
DUT_SLIMDAT
DUT_SLIMCLK
R6
120R
Unpop
C1
47pF
Unpop
GND
U3-B
Power domain - DBVDD1
RST
H8
RESET
SPI_SCLK
SPI_MOSI
SPI_SS
L11
L9
K10
CIF1SCLK
CIF1MOSI
CIF1SS
CIF1MISO
M10
SPI_MISO
I2C_SCLK
I2C_SDA
P12
N11
CIF2SCLK
CIF2SDA
MIF1SCLK/GPIO16
MIF1SDA/GPIO7
T8
P8
MIF_SCLK
MIF_SDA
TRST
TMS
TCK
TDI
M8
K8
R7
N7
TRST
TMS
TCK
TDI
TDO
L7
TDO
MCLK1
M12
MCLK1
IRQ
J9
IRQ
AIF1BCLK
AIF1LRCLK
AIF1RXDAT
R19
33R
T12
R11
P10
AIF1BCLK/GPIO9
AIF1LRCLK/GPIO11
AIF1RXDAT/GPIO8
AIF1TXDAT/GPIO10
T10
AIF1TXDAT
DUT_SLIMCLK
DUT_SLIMDAT
R9
N9
SLIMCLK
SLIMDAT
Power Domain - DBVDD2
MCLK2
T6
MCLK2
AIF2BCLK
AIF2LRCLK
AIF2RXDAT
R7
33R
P6
M6
K6
AIF2BCLK/GPIO13
AIF2LRCLK/GPIO15
AIF2RXDAT/GPIO14
AIF2TXDAT/GPIO12
L5
AIF2TXDAT
AIF3BCLK
AIF3LRCLK
AIF3RXDAT
R8
33R
R5
N5
P4
AIF3BCLK/GPIO2
AIF3LRCLK/GPIO4
AIF3RXDAT/GPIO3
AIF3TXDAT/GPIO1
M4
AIF3TXDAT
SPKCLK/GPIO6
SPKDAT/GPIO5
M2
N3
CS47L35_CSP101
CS47L35
SPKCLK
R14
33R
CLKOUT
Unpop
R18
33R
PDMOUT_CLK
SPKDAT
Unpop
R17
0R
PDMOUT_DAT
R15
0R
GPIO5
R16
10K
GND
CIRRUS LOGIC

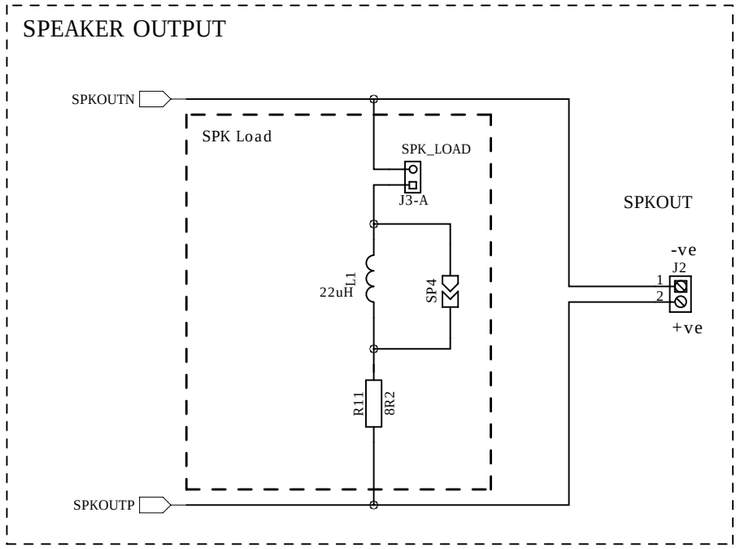

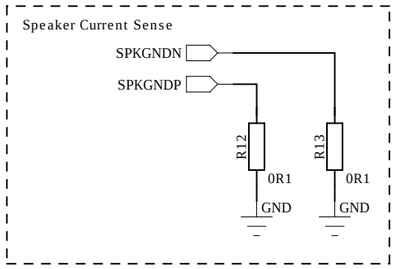

CIRRUS LOGIC®

USER NOTE
GPIO5 is used to determine whether Sleeve or Ring2 is grounded:
When GPIO5=high, sleeve is grounded.
When GPIO5=low, ring2 is grounded.
The shorting points can be used to force ring2 and/or sleeve to be grounded.

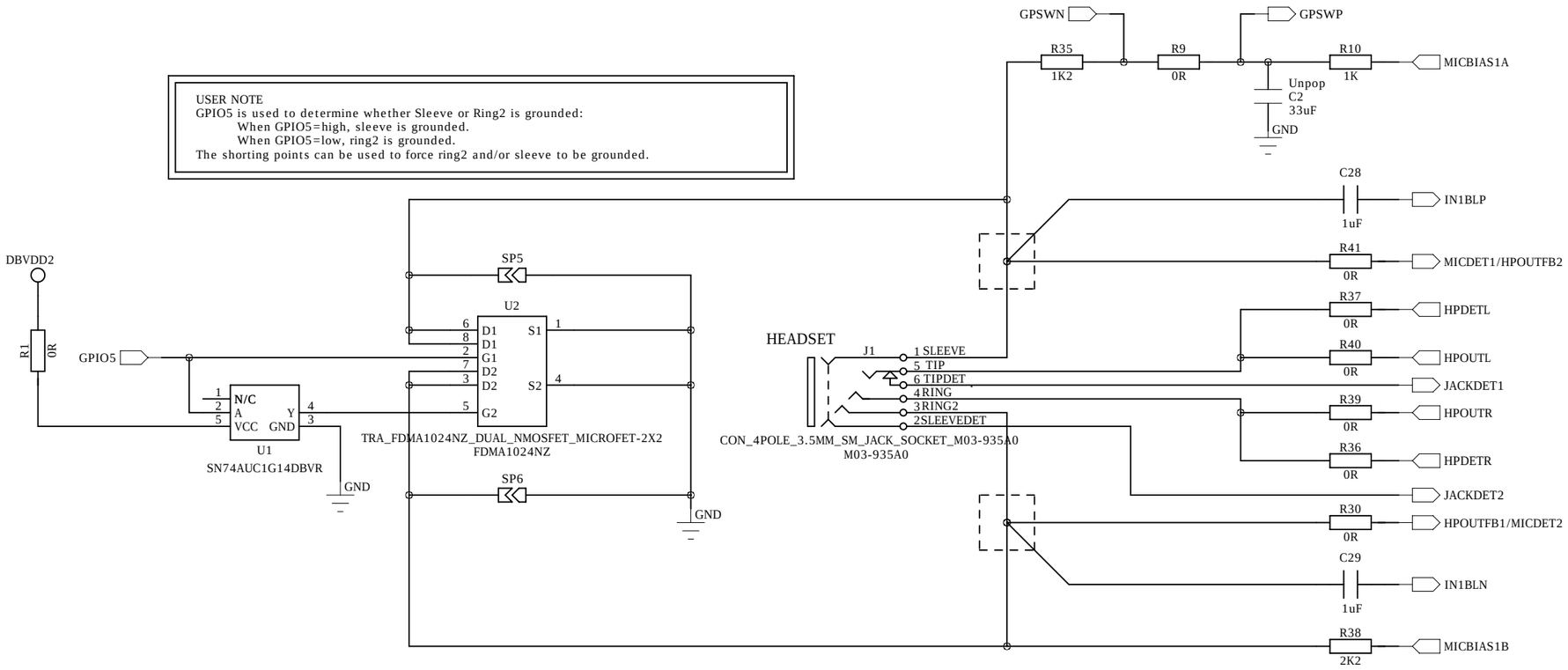

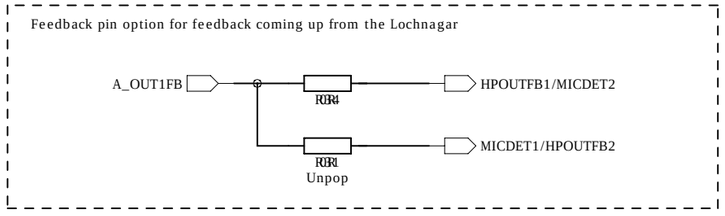

CIRRUS LOGIC®

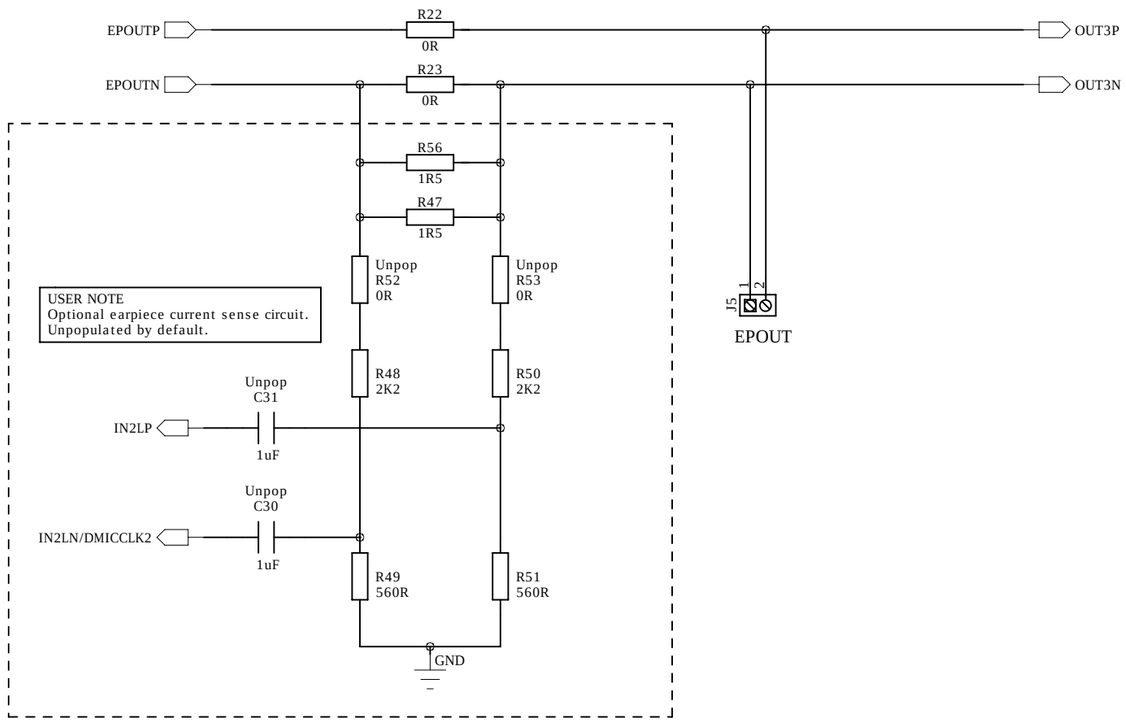

CIRRUS LOGIC®

3.3V REGULATOR

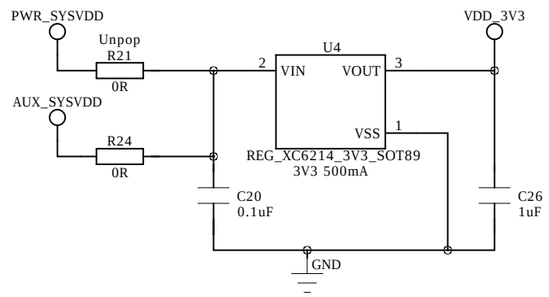

I2C master Interface

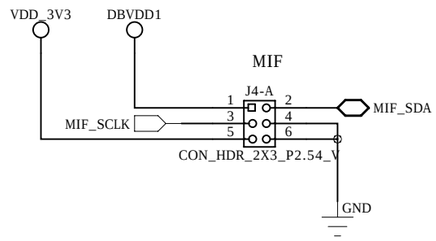

CIRRUS LOGIC®

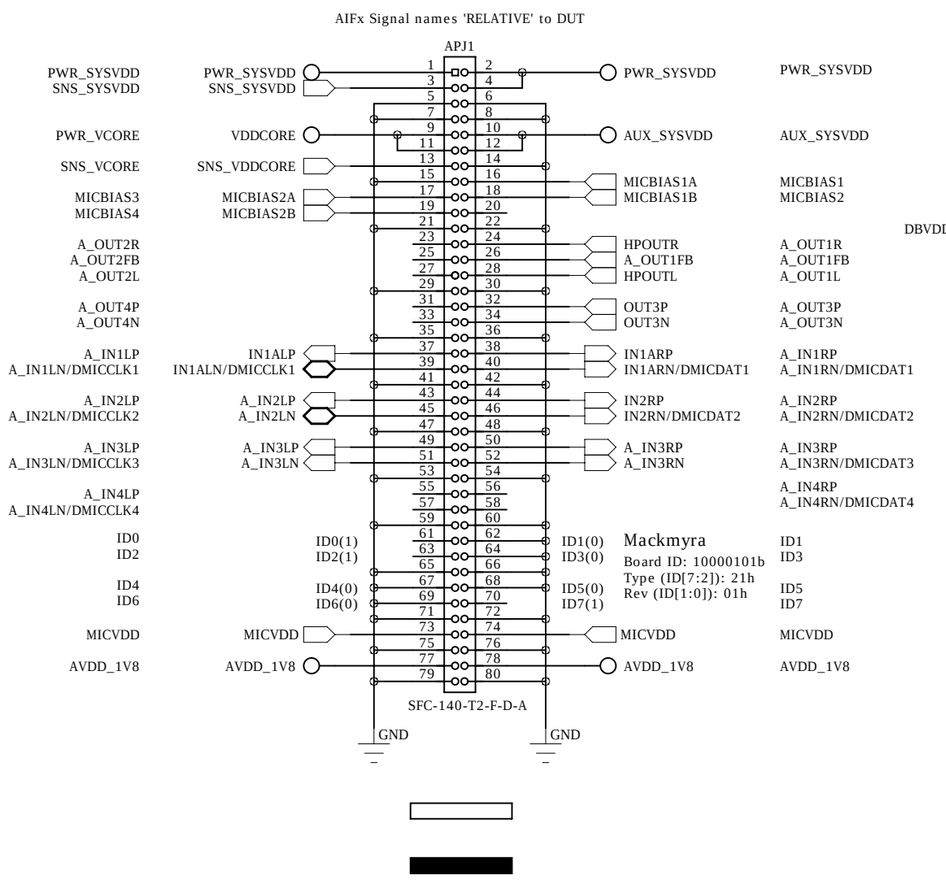

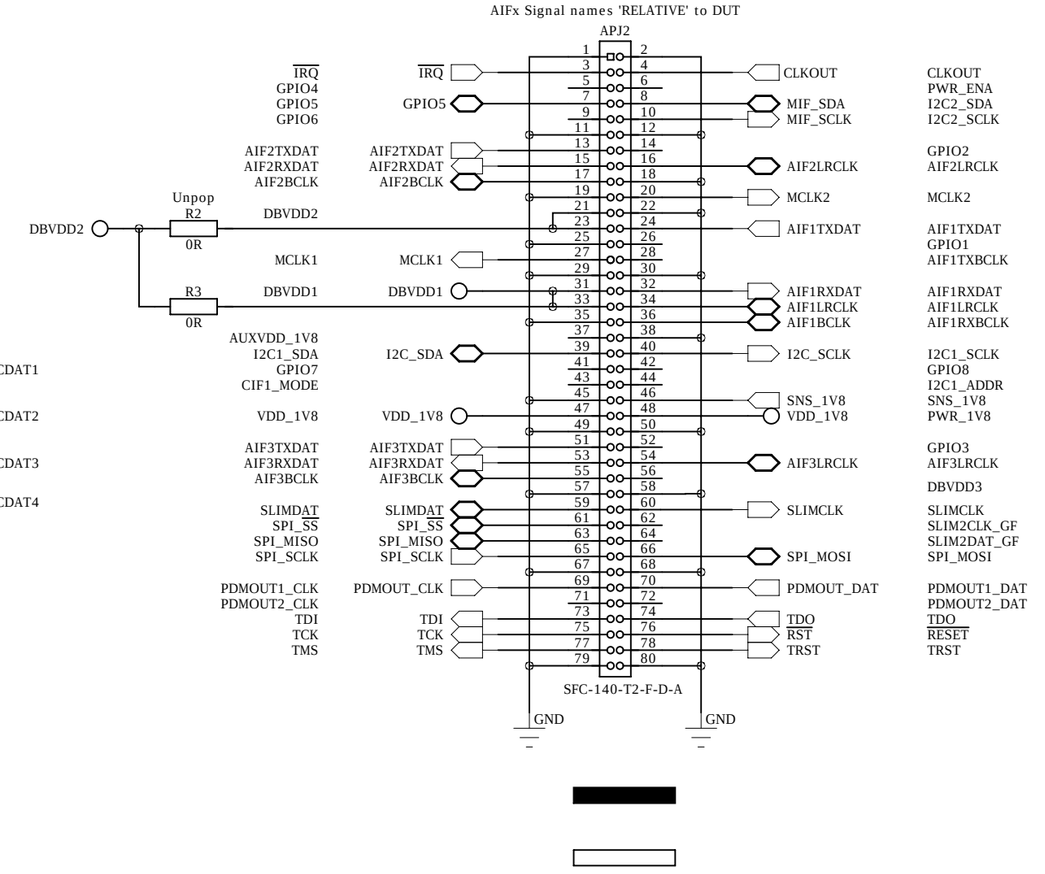

CIRRUS LOGIC®

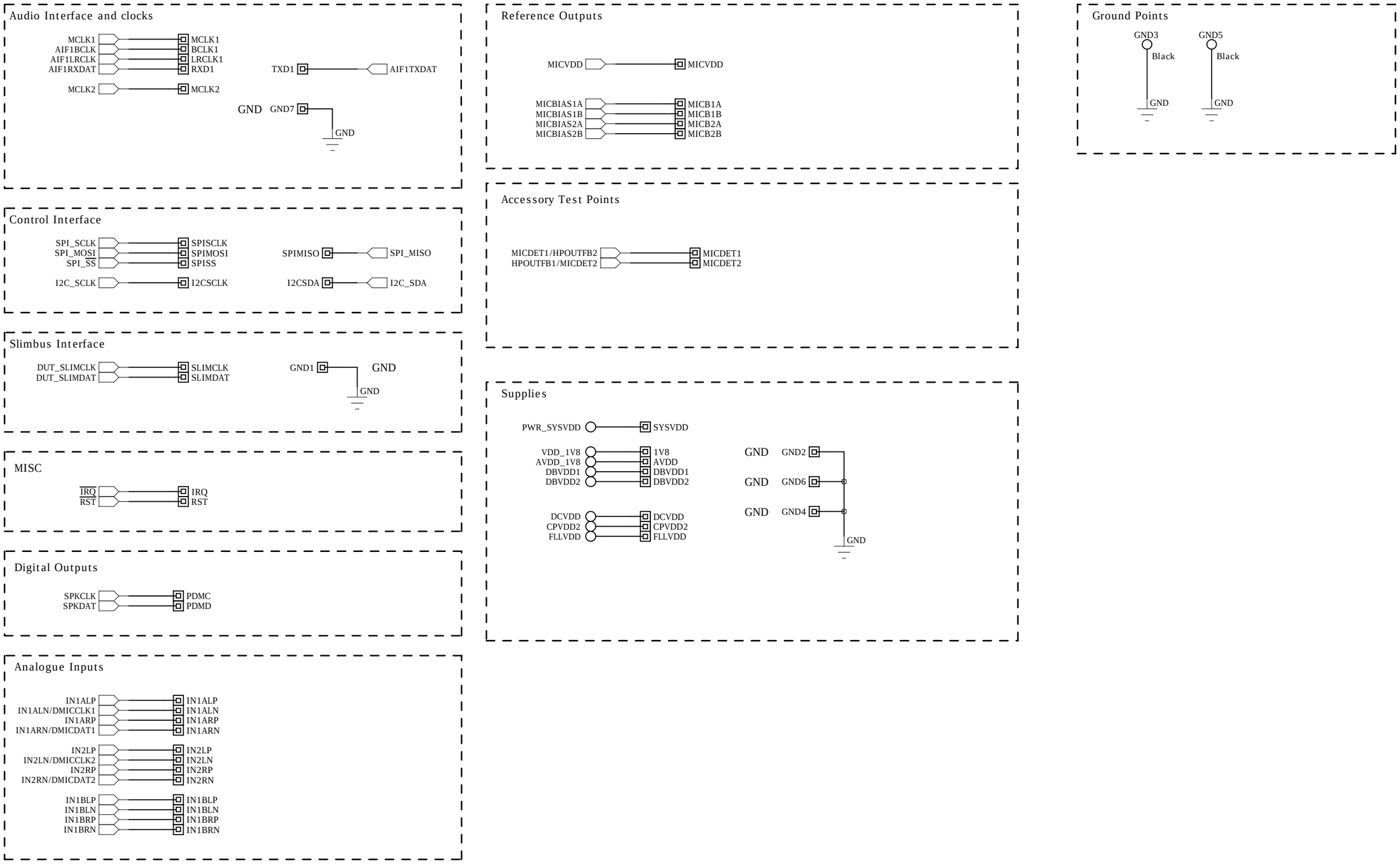
Audio Interface and clocks
MCLK1
AIF1BCLK
AIF1LRCLK
AIF1RXDAT
MCLK2
MCLK1
BCLK1
LRCLK1
RXD1
MCLK2
TXD1
AIF1TXDAT
GND
GND7
GND
Control Interface
SPI_SCLK
SPI_MOSI
SPI_SS
I2C_SCLK
SPISCLK
SPIMOSI
SPISS
I2CSCLK
SPIMISO
SPI_MISO
I2CSDA
I2C_SDA
Slimbus Interface
DUT_SLIMCLK
DUT_SLIMDAT
SLIMCLK
SLIMDAT
GND1
GND
GND
MISC
IRQ
RST
IRQ
RST
Digital Outputs
SPKCLK
SPKDAT
PDMC
PDMD
Analogue Inputs
IN1ALP
IN1ALN/DMICCLK1
IN1ARP
IN1ARN/DMICDAT1
IN2LP
IN2LN/DMICCLK2
IN2RP
IN2RN/DMICDAT2
IN1BLP
IN1BLN
IN1BRP
IN1BRN
IN1ALP
IN1ALN
IN1ARP
IN1ARN
IN2LP
IN2LN
IN2RP
IN2RN
IN1BLP
IN1BLN
IN1BRP
IN1BRN
Reference Outputs
MICVDD
MICVDD
MICBIAS1A
MICBIAS1B
MICBIAS2A
MICBIAS2B
MICB1A
MICB1B
MICB2A
MICB2B
Accessory Test Points
MICDET1/HPOUTFB2
HPOUTFB1/MICDET2
MICDET1
MICDET2
Supplies
PWR_SYSVDD
SYSVDD
VDD_1V8
AVDD_1V8
DBVDD1
DBVDD2
1V8
AVDD
DBVDD1
DBVDD2
DCVDD
CPVDD2
FLLVDD
DCVDD
CPVDD2
FLLVDD
GND
GND2
GND
GND6
GND
GND4
GND
Ground Points
GND3
GND5
Black
Black
GND
GND
CIRRUS LOGIC

	Short	Open
J3-B	8R + 22uH	No Load
PCB Ref: SPK_LOAD		

LNK_J3

YELLOW

Short

CIRRUS LOGIC®