ECO#	REV	DESCRIPTION	INC BY/DATE	CHK BY/DATE

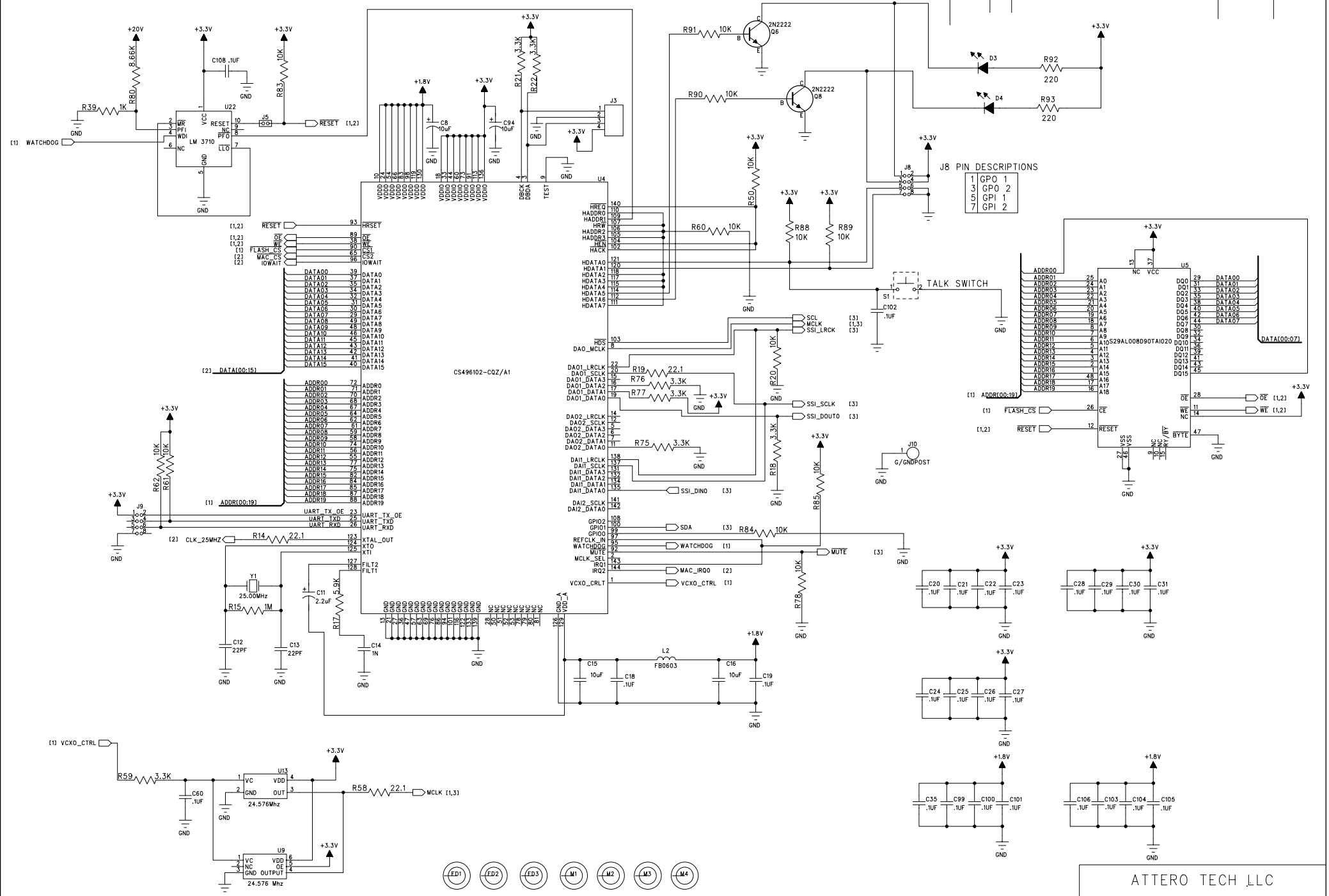

ATTERO TECH LLC	
PART #: 600-00005-02	REV B
DESCRIPTION: CEILING SPEAKER DESIGN (CNSRD)	
SHEET TITLE: CS496102	
DRAWN BY: PARUL REDDY	ENGINEER
DATE: 11/16/05	SIZE C SHEET 1 OF 4

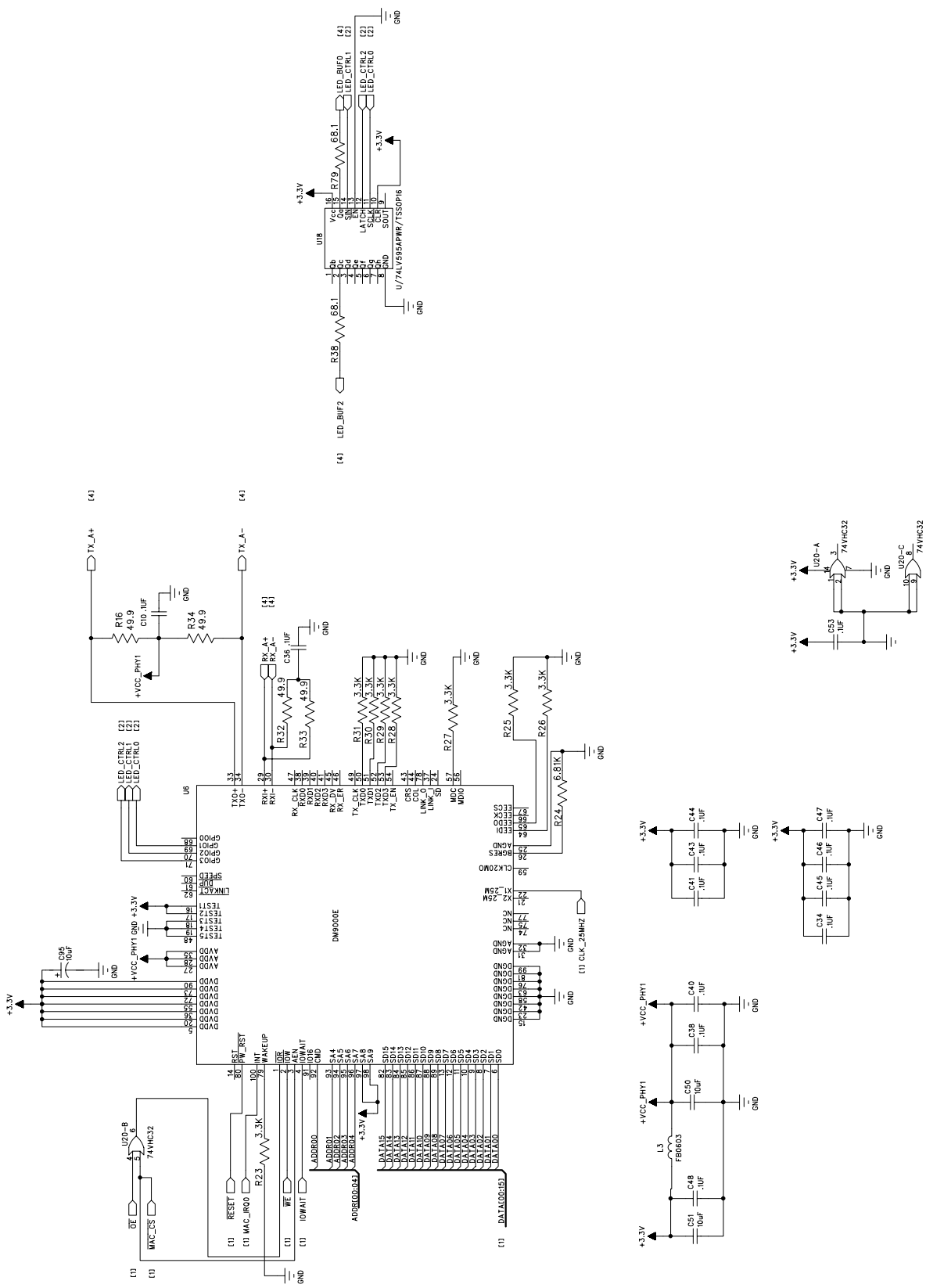
U8
U/74LV595APWR/TSSOP16
R38 68.1
R79 68.1
LED_BUF2
LED_BUF0
LED_CTRL1
LED_CTRL2
LED_CTRL0
+3.3V
GND
U6
DM9000E
TX_A+
TX_A-
RX_A+
RX_A-
R16 49.9
R34 49.9
C10 .1UF
+VCC_PHY1
R32 49.9
R33 49.9
C36 .1UF
R31 3.3K
R30 3.3K
R29 3.3K
R28 3.3K
R27 3.3K
R25 3.3K
R26 3.3K
R24 6.81K
C95 10uF
U20-B 74VHC32
U20-A 74VHC32
U20-C 74VHC32
C53 .1UF
C44 .1UF
C43 .1UF
C41 .1UF
C47 .1UF
C46 .1UF
C45 .1UF
C34 .1UF
C40 .1UF
C38 .1UF
C50 10uF
L3 FB0603
C48 .1UF
C51 10uF
R23 3.3K
OE
WAC_CS
RESET
WAC_IRQ0
WE
IOWAIT
ADDR00
ADDR[00:04]
DATA[00:15]
CLK_25MHZ
LINKACT
SPEED
DUP
TEST1
TEST2
TEST3
TEST4
TEST5
AVDD
DVDD
AGND
DGND
RST
PW_RST
INT
WAKEUP
IOR
IOW
IOCS
IOWAIT
IO16
CMD
SA4
SA5
SA6
SA7
SA8
SA9
SD15
SD14
SD13
SD12
SD11
SD10
SD9
SD8
SD7
SD6
SD5
SD4
SD3
SD2
SD1
SD0
TX0+
TX0-
RX0+
RX0-
RX_CLK
RXD0
RXD1
RXD2
RXD3
RX_DV
RX_ER
TX_CLK
TXD0
TXD1
TXD2
TXD3
TX_EN
CRS
COL
LINK_O
LINK_I
SD
MDC
MDIO
EECS
EECD
EEDI
BGRES
CLK20MO
X1_25M
X2_25M
NC
GPIO0
GPIO1
GPIO2
GPIO3
LED_CTRL2
LED_CTRL1
LED_CTRL0
PART #: 600-00005-02
REV B
SHEET TITLE: ETHERNET INTERFACE
DATE: 08/30/05
SIZE C
SHEET 2 OF 4

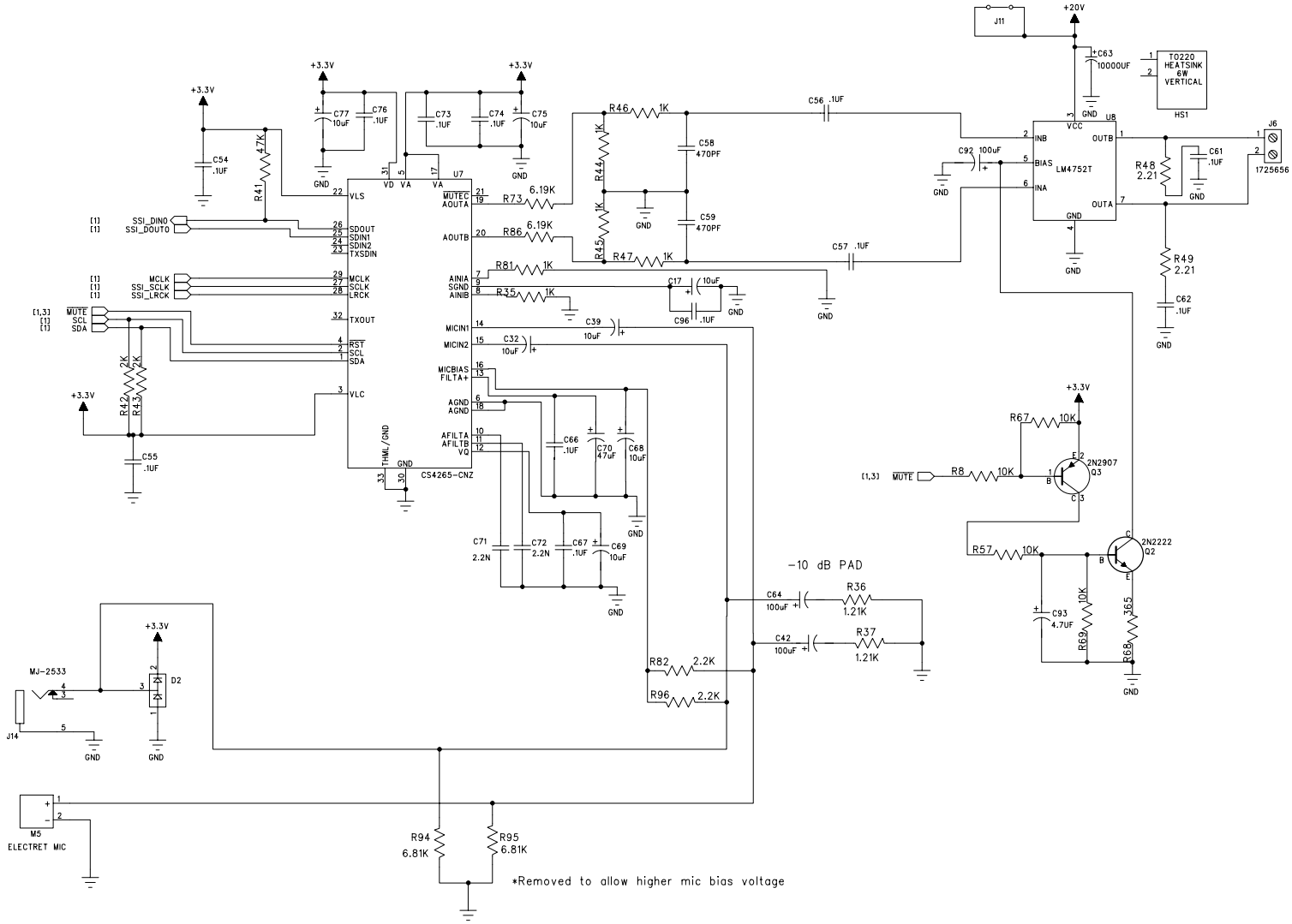

PART #: 600-00005-02		REV B
SHEET TITLE: POWER AMPLIFIER		
DATE: 08/30/05	SIZE C	SHEET 3 OF 4

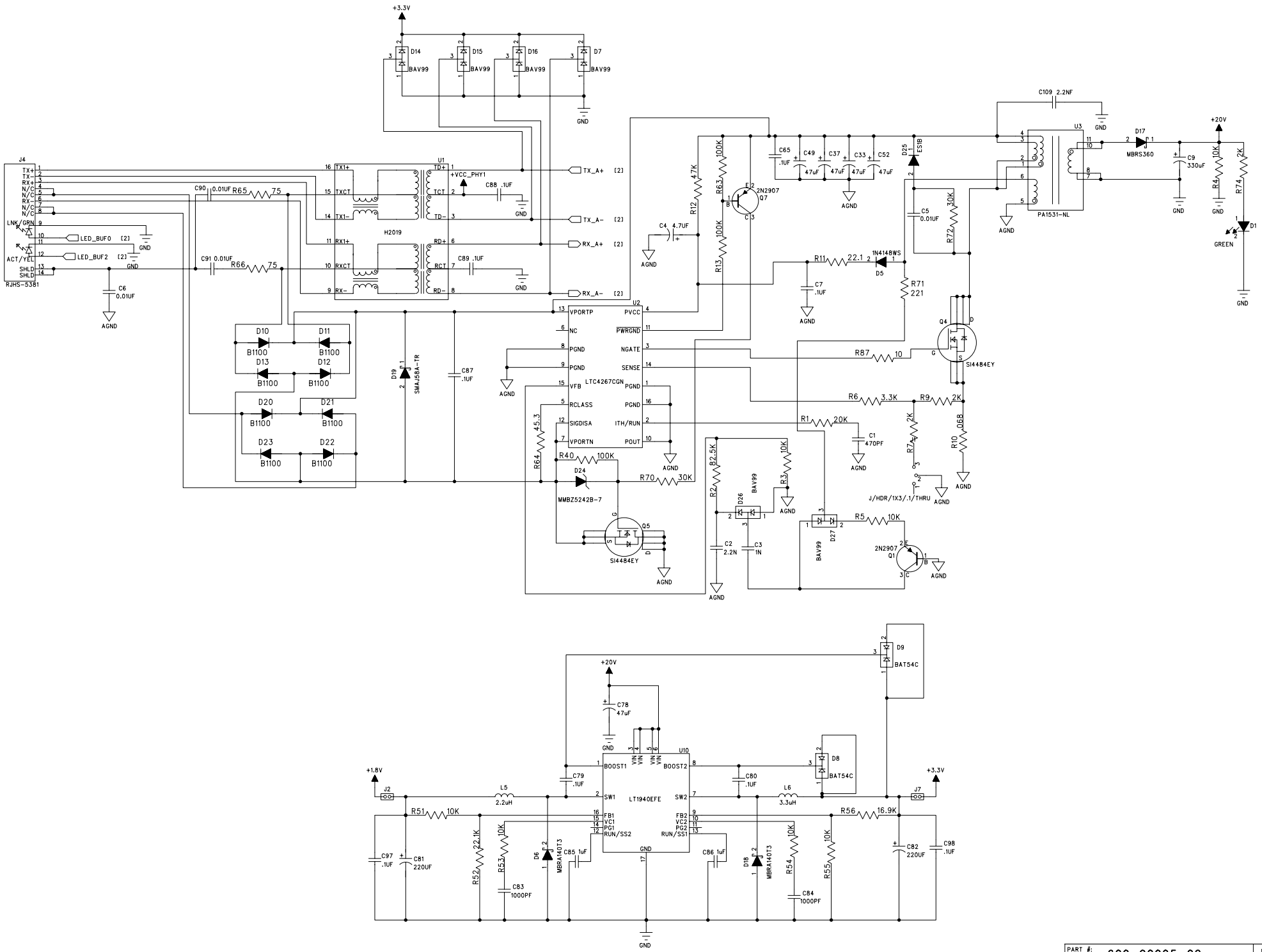

PART #: 600-00005-02		REV B
SHEET TITLE: POWER SUPPLY		
DATE: 08/30/05	SIZE C	SHEET 4 OF 4